REVISION HISTORY			
REV	DESCRIPTION	DATE	APPROVED

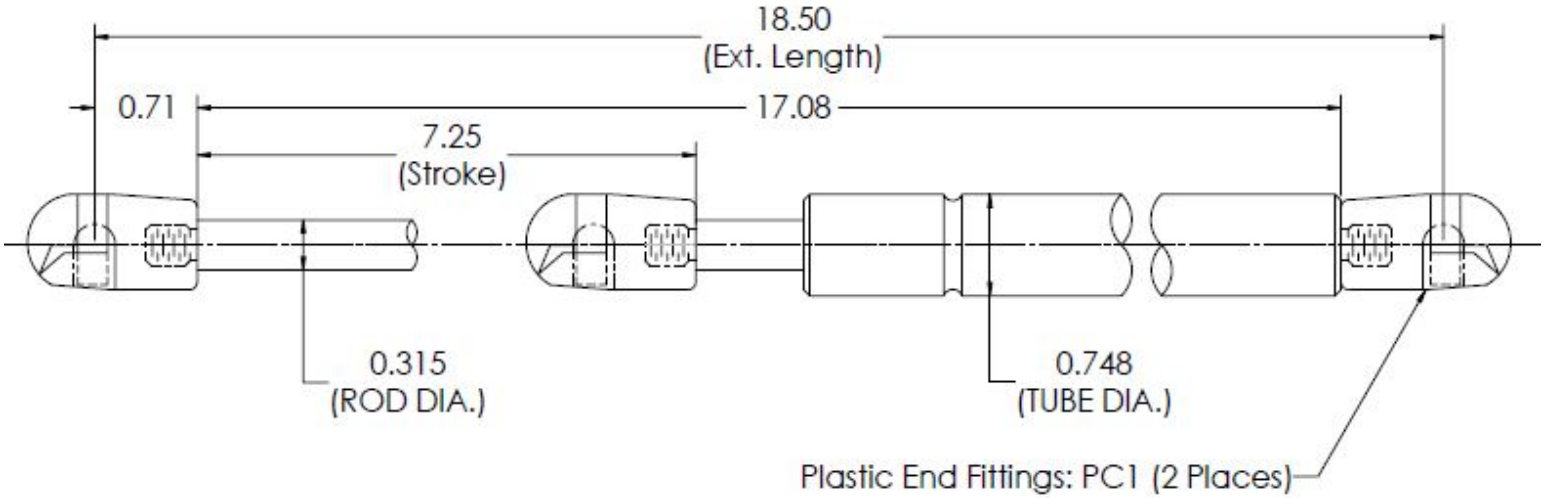

NOTES:

1. MATERIAL : CYLINDER - HEAVY GAUGE STEEL, BLACK POWDERCOAT PAINT
   ROD - HARDENED STEEL, BLACK NITRIDE
2. FORCE : 30 POUNDS
3. DIMENSIONS ASSUMING END CONNECTORS ARE FULLY SCREWED INTO PLACE
4. DRAWING LENGTHS (NOT DIMENSIONED) OF CYLINDER AND ROD BODIES ARE NOT TO SCALE

NUOMENG

THIS DOCUMENT AND ITS CONTENTS ARE THE PROPERTY OF NUOMENG
THIS DOCUMENT CONTAINS CONFIDENTIAL PROPRIETARY INFORMATION. THE REPRODUCTION, DISTRIBUTION, UTILISATION OR THE COMMUNICATION OF THIS DOCUMENT OR ANY PART THEREOF, WITHOUT EXPRESS AUTHORISATION IS STRICTLY FORBIDDEN.

REMOVE ALL BURRS & BREAK ALL SHARP EDGES

ALL DIMENSIONS ARE IN INCHES UNLESS OTHERWISE SPECIFIED

	NAME	DATE
DRAWN	Boytcho	12/08/18
CHECKED		

DWG NO NSG1850M30PC1 REV 0

TITLE GAS SPRING -

TOLERANCES	
X.X	±0.060
X.XX	±0.030
X.XXX	±0.015
ANGLES	±1.0°
HOLES	±0.005

THIRD ANGLE PROJECTION

SHEET 1 OF 1

SCALE N.T.S.

SIZE B